Mechanical Safety Lock 309X, tubular frame door version 309X102PZ

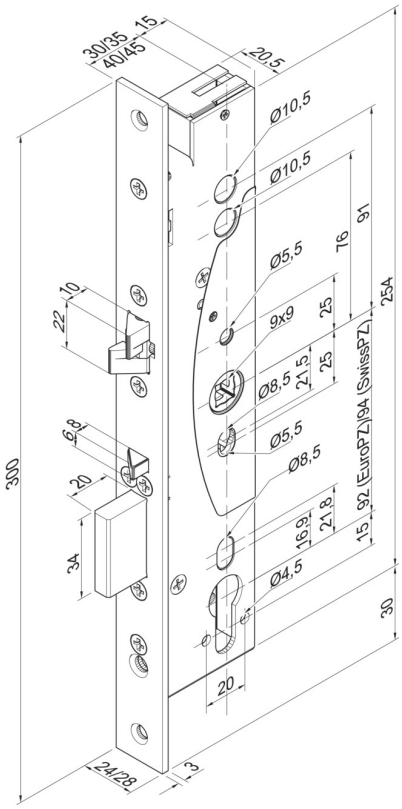

Product description

The mechanical security lock 309X is used where the locking of a door has to be ensured by a 20 mm dead bolt throw for insurance reasons.

Overview of Advantages

- Mechanical automatic locking system
- With double action lock, so can be used with both DIN left-hand and right-hand
- Mechanical self-locking process control between double action lock and control latch
- Burglary-resistant due to solid bolt with 20 mm throw
- Burglary resistance up to resistance class 2 can be achieved in suitable door systems
- Panic function – approval in accordance with EN 179 – approval in accordance with EN 1125
- Suitable for fire doors
- Used with front door furniture
- Changeover function for unlocking with a key from the outside

Scope of delivery

- 1 piece security lock
- 1 operating manual

Note

- Series 309X locks have a continuous handle follower and therefore require an exchange fitting (inside handle or crash bar, outside knob or crash bar).

Technical data

DIN direction	Universal
Distance	92 mm
Approval DIN EN 179	Certificate of Constancy of performance 0432-CPR-00007-11
DIN EN 1125 approval	Certificate of Constancy of performance 0432-CPR-00007-12
Version	Euro profile cylinder
Backset	30 mm
Width face plate	24 mm
Panic function	Yes
Building authorities test certificate	P-12000460
Bolt throw	20 mm
Handle follower	9 mm
DIN direction	Double action latch
Suitable for fire doors	Yes
Minimum load capacity of latch bolt	5 kN
Minimum load capacity of bolt	10 kN
Bolt counterpressure	6 kN

Article number	309X102PZ-----1
EAN	4042203169265

ASSA ABLOY Sicherheitstechnik GmbH
Bildstockstraße 20 72458 Albstadt albstadt@assaabloy.com
Tel. + 497431 123-0 Fax + 497431 123-240 www.assaabloyopeningsolutions.de